VM□5 SERIES

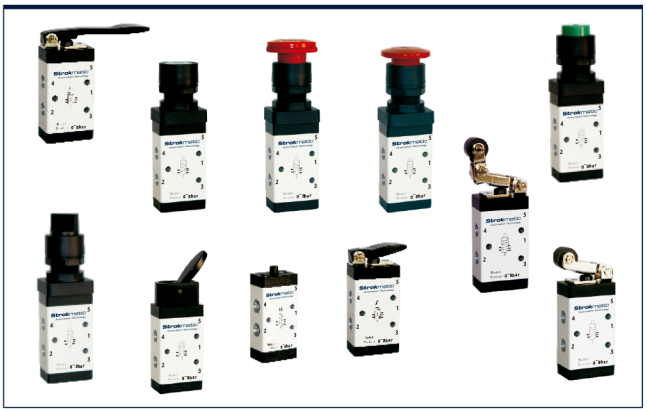

Symbol

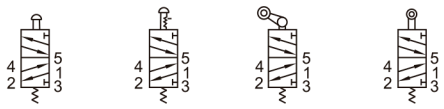

Product feature

1. Exhaust outlet locates over the body, which is convenient to install muffler to decrease noise and pollution.
2. The external force required by direction-change of series of VMB5, VMR5 and VML5 is provided by external mechanism, which can be used for position test or [stroke switch] limit switch.
3. VMC5,VMD5,VMY5,VMPF5,VMPM5,VMP5P,VMPL5 and VMHS5 are operated manually, owning control joints with several structure forms and suitable for application under different conditions.
4. It is in sliding column structure that the control force is not influenced by working pressure (that is, there is no back pressure effect); internal circle is sealed with good tightness and the direction-change is sensitive.
5. Lubricant is not necessary.
6. Multi-mounting makes it convenient to install and apply.
7. The control joints of series of M5C,M5D,M5Y,M5R and M5L are made of metal which has longer service life and more reliable and steady performance.

Ordering code

VM	PL	5	0	A	01	-	R
①	②	③	④	⑤	⑥		⑦

① **Model**

VM: Mechanical Valve

② **Actuator**

B: Basic Type
C: Long Handle Type
D: Short Handle Type
Y: Lever Type
R: Roller Type
L: Roller With Free Return Type
PL: Latching Type
PP: Protruding Type
PF: Flat Type
PM: Mushroom Type
HS: Selector Type

③ **Valve Type**

5: 5/2 Way

④ **Series Code**

0: 0 Serie
1: 1 Serie

⑤ **Directional control**

A: 2 Positions

⑥ **Port Size**

Actuador	Port size
B, R, L	M5: M5
B, R, L Others	01: 1/8" G
	02: 1/4" G

⑦ **Button Color**

Actuador	Button Color
PL	R: Red
PP, PF PM, HS	R: Red
	G: Green
	B: Black
Others	-

Specification

Valve	VMB	VMC	VMD	VMY	VMR	VML	VMPL	VMPP	VMPF	VMPM	VMHS
Fluid	Air(to be filtered by 40μm filter element)										
Acting	External control direct acting type										
Port size	M5:M5; 01:1/8"G; 02:1/4"G										
Valve type	5 port 2 position										
Lubrication	Not required										
Operating pressure	0~10bar(0~145psi)										
Proof pressure	15bar(215psi)										
Temperature ℃	-20~70										
Orifice size	50AM5:2.5 mm² Cv(=0.14); 50A01:8.0 mm² Cv(=0.45); 51A01:9.0 mm² Cv(=0.50); 51A02:12.0 mm² Cv(=0.67)										
Material of body	Aluminum alloy										

Flow chart

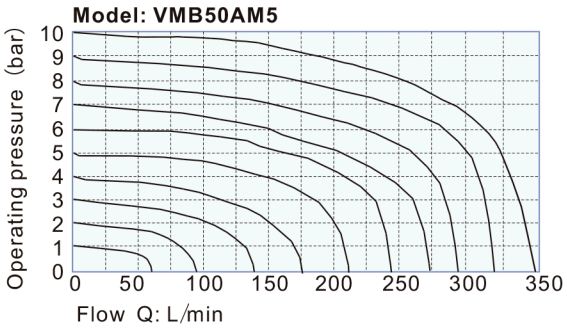

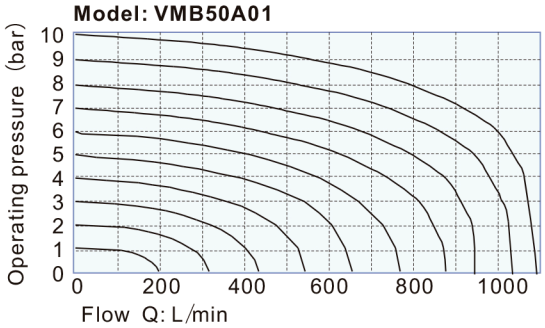

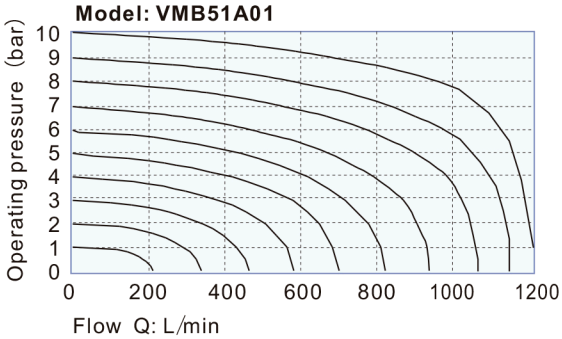

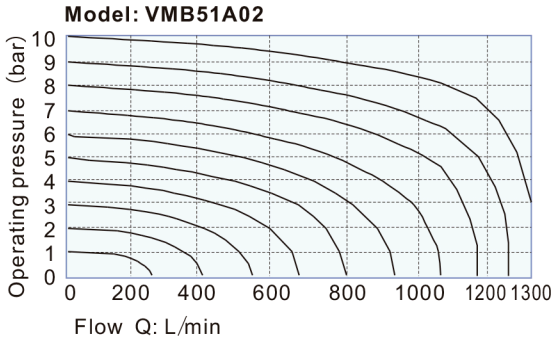

Inner structure

VMR51A

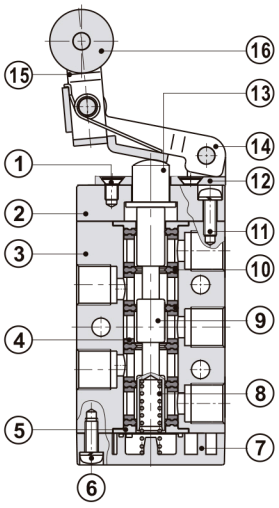

No.	Item
(1)	Screw
(2)	Fore cover
(3)	Body
(4)	Spacer
(5)	Positioning block
(6)	Screw
(7)	Bottom cover
(8)	Spring
(9)	Spool
(10)	Piston O-ring
(11)	Screw
(12)	Roller holder
(13)	Axle
(14)	Rotating block
(15)	Rocker
(16)	Roller

Reversal stroke

Type	Spool stroke	Button stroke	Type	Spool stroke	Roller(handle) stroke	Type	Spool stroke	Roller stroke
VMB5	2.0~3.3	-	VMR5	2.0~3.0	4.6~6.8	VMB5M5	2.0~3.3	-
VMPF5	2.0~3.3	3.8~5.1	VML5	2.0~3.0	5.0~7.8	VMR5M5	2.0~3.0	6.0~8.5
VMPP5	2.0~3.3	3.8~5.1	VMC5	2.0~3.0	11.0~16.0	VML5M5	2.0~3.0	7.0~10.0
VMPM5	2.0~3.3	3.8~5.1	VMD5	2.0~3.0	5.5~8.0			
VMPL5	2.0~3.3	5.9~7.2						
VMHS5	2.0~3.3	5.1~6.4						

Assemble chart

Attentions

1)The control set is made of engineering plastic which only allows manual operation and switching valves through metal impact is forbidden.
2)The series of VMB5, VMC5, VMD5,VMPM5, VMPF5 and VMPP5 get the function of automatic restoration. The hand valves of VMY5, VMHS5 and VMPL5 are in the type of manual restoration. VMPL5 will be restored by turning the revolve button after being pressed into orientation.
3) Pay attention to the reversing stroke. The reversing stroke can not surpass its stroke stipulated in stroke control table when the direction -change of the valve is forced by any external forces, otherwise it will cause the damage of the valve.
4) The VML5 can only switch the valve in single direction (impact from right to left). The impact from the other direction is invalid (from left to right).
5) Control joint combination can be ordered individually. Please refer to the table on the right for order details.

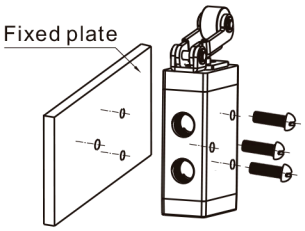

Fixation way of body

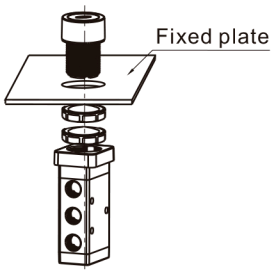

Fixation way of panel

Dimensions

VMB50AM5

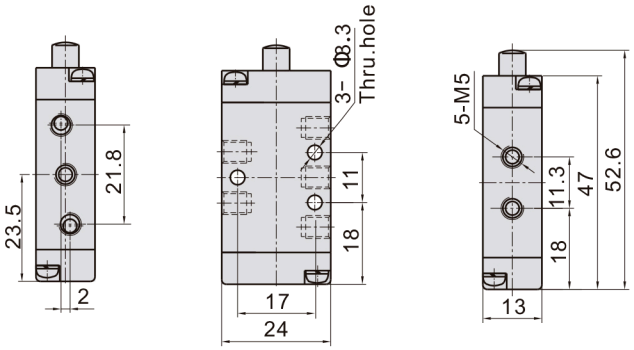

VMB50A01\VMB51A01\VMB51A02

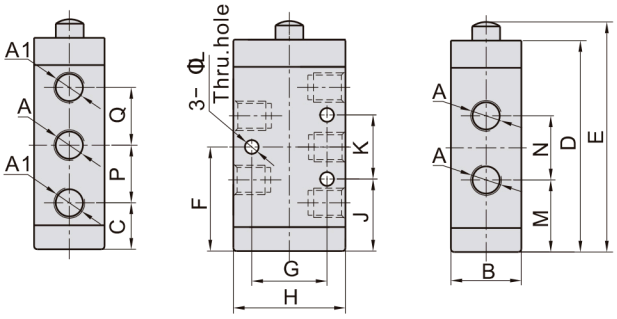

Model\Item	A	A1	B	C	D	E	F	G
VMB50A01	1/8"G	1/8"G	18	15	57.5	63	29	18
VMB51A01	1/8"G	1/8"G	22	14.5	66	71.8	32.5	23.5
VMB51A02	1/4"G	1/8"G	22	14.5	66	71.8	32.5	23.5

Model\Item	H	J	K	L	M	N	P	Q
VMB50A01	27	22	14	3.3	21	16	14	14
VMB51A01	35	22.5	20	4.3	22.5	20	18	18
VMB51A02	35	22.5	20	4.3	22.5	20	18	18

Model: HS(Selector Type)

Ordering code	Type
VMHSM5-P11A	VMHS selector type control set (Green)
VMHSM5-P12A	VMHS selector type control set (Red)
VMHSM5-P13A	VMHS selector type control set (Black)
Applicable products	VMHS50, VMHS51

Dimensions

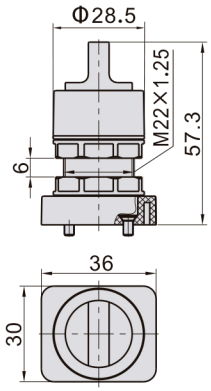

Model: PP(Protruding Type)

Ordering code	Type
VMPPM5-P11A	VMPP protruding type control set (Green)
VMPPM5-P12A	VMPP protruding type control set (Red)
VMPPM5-P13A	VMPP protruding type control set (Black)
Applicable products	VMPP50, VMPP51

Dimensions

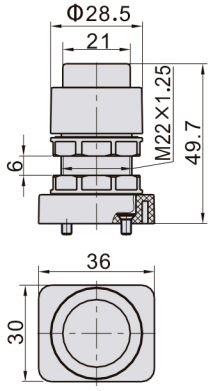

Model: PF(Flat Type)

Ordering code	Type
VMPFM5-P11A	VMPF flat type control set (Green)
VMPFM5-P12A	VMPF flat type control set (Red)
VMPFM5-P13A	VMPF flat type control set (Black)
Applicable products	VMPF50, VMPF51

Dimensions

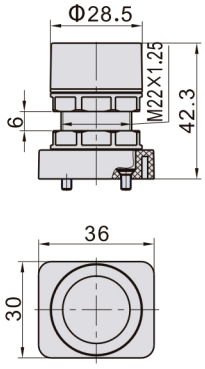

Model: PM(Mushroom Type)

Ordering code	Type
VMPMM5-P11A	VMPM mushroom type control set (Green
VMPMM5-P12A	VMPM mushroom type control set (Red)
VMPMM5-P13A	VMPM mushroom type control set (Black)
Applicable products	VMPM50, VMPM51

Dimensions

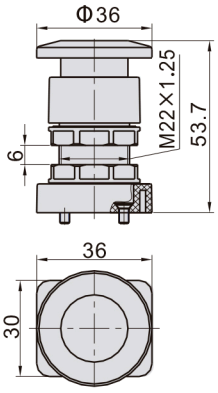

Model: PL(Latching Type)

Ordering code	VMPLM5-P12A
Type	VMPL Latching type control set (Red)
Applicable products	VMPL50, VMPL51

Dimensions

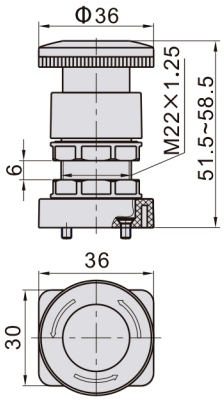

Model: Y(Lever Type)

Ordering code	VMY31-P13A
Type	VMY Lever type control set
Applicable products	VMY50, VMY51

Dimensions

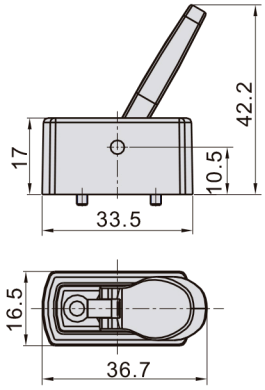

Control set dimensions

Model: C(Long Handle Type)

Ordering code	VMC31-P13A
Type	VMC31 Long handle type control set
Applicable products	VMC50, VMC51
Dimensions	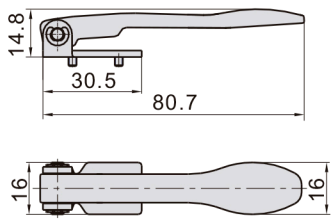

Model: D(Short Handle Type)

Ordering code	VMD31-P13A
Type	VMD31Short handle type control set
Applicable products	VMD50, VMD51
Dimensions	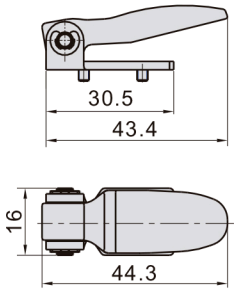

Model: R(Roller Type for M5)

Ordering code	VMRM5-P14A
Type	VMRM5 Roller type control set
Applicable products	VMR50AM5
Dimensions	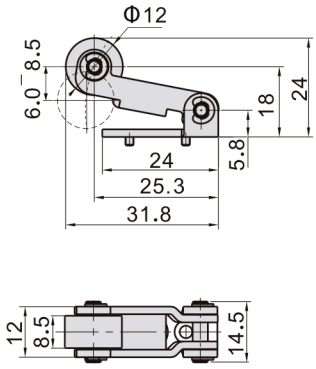

Model: R(Roller Type for 01, 02)

Ordering code	VMR31-P14A
Type	VMR31 Roller type control set
Applicable products	VMR50A01, VMR51
Dimensions	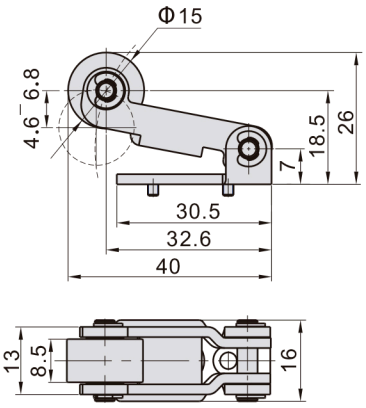

Model: L(Roller With Free Return Type for M5)

Ordering code	VMLM5-P14A
Type	VMLM5 Roller with free return type control set
Applicable products	VML50M5
Dimensions	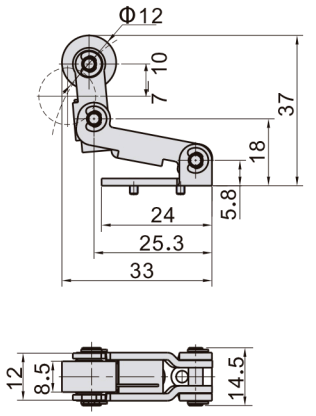

Model: L(Roller With Free Return Type for 01,02)
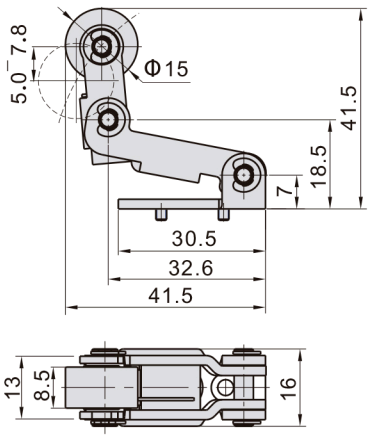
Ordering code	VML31-P14A
Type	VML31Roller with free return type control set
Applicable products	VML50A01, VMD51
Dimensions